REVISIONS			
REV	DESCRIPTION	DATE	APPROVED

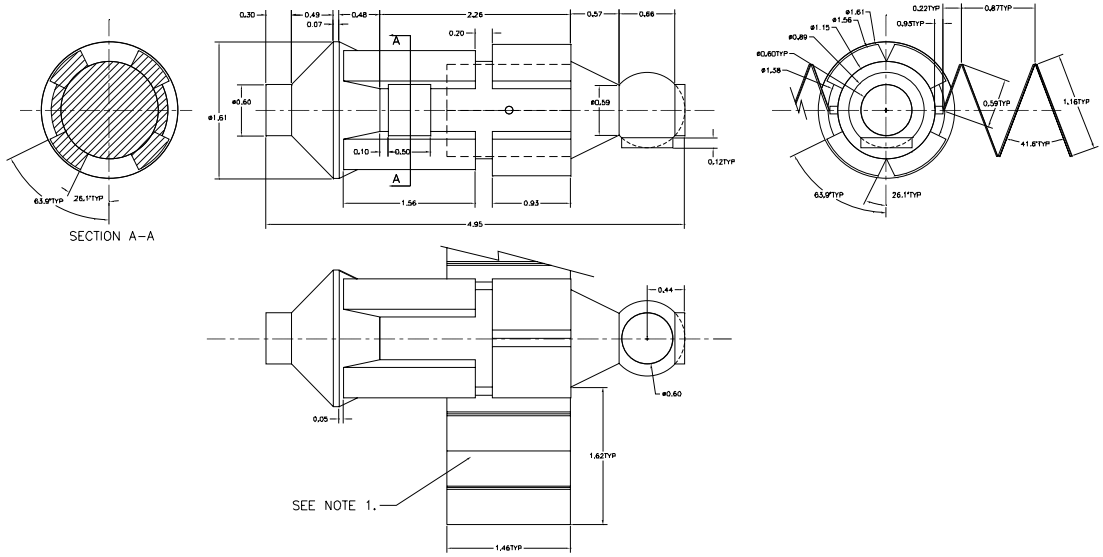

NOTES:
1. AT FULL SCALE SOLAR PANELS & RADIATORS ARE ONLY ABOUT ONE INCH THICK. IT IS IMPRACTICAL TO MAINTAIN TRUE SCALE. USE ANY THIN SHEET MATERIAL AVAILABLE.

ITEM #6
FGB

TITLE			
FGB			
SIZE B	ITEM NO. 6	DRAWING NO. 2	REV
SCALE: 1:100	DRAWN BY: PAUL N. KACZANOWSKI	SHEET 2	OF 12